AVNET
Reach Further™

ESSENTIAL GUIDE TO BRUSHED MOTOR CONTROLLERS/DRIVERS

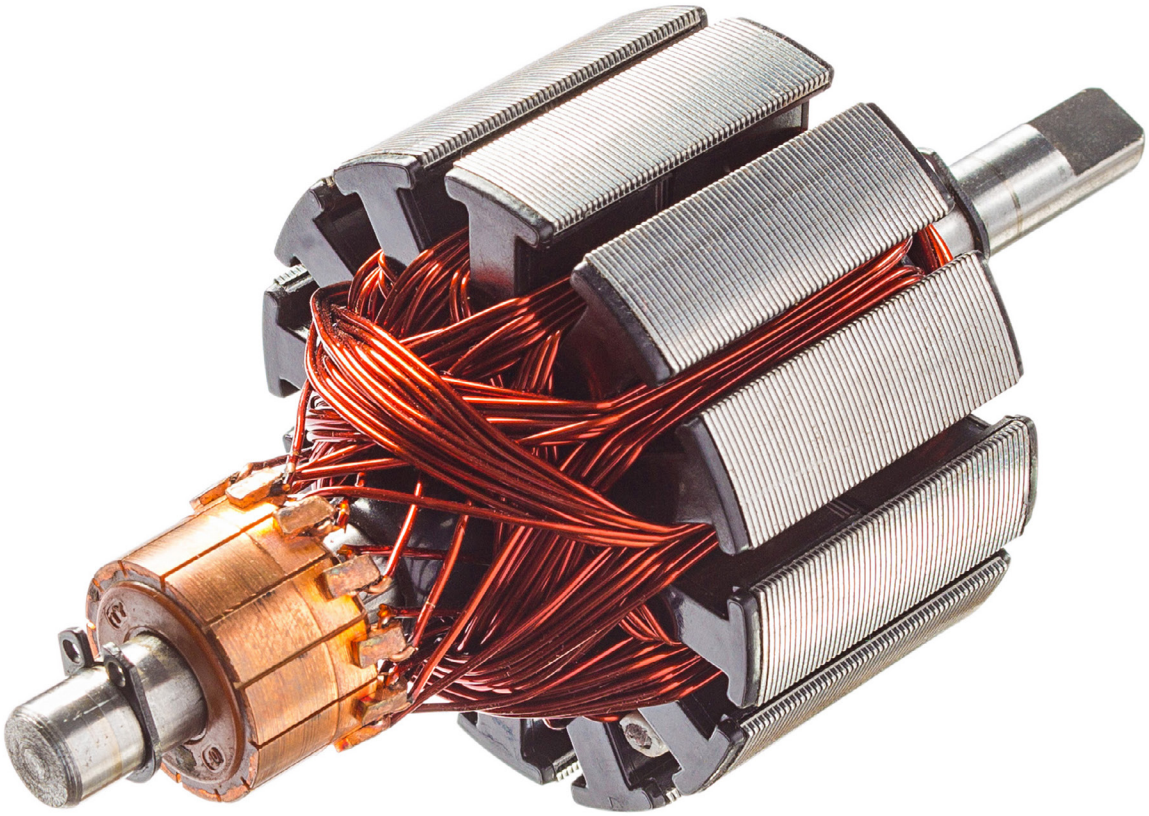

Sponsored by:

TOSHIBA

Introduction

Brushed motors are one of several types of DC motors used in a wide range of electrical and electronic products. While the motor specifications are important, it is the electronic control circuitry that is the secret to achieving the desired performance. This white paper addresses the brushed motor control function and introduces an integrated circuit (IC) that can provide the desired control for many common applications.

Introduction to Brushed Motors

Motors are everywhere. Stop a minute and think about all the motors in your home, office, and car. Dig deep and list as many as you can. Probably more than you thought. And if you are reading this white paper, chances are that you are working on a motor project.

When choosing a small motor for use in an industrial, business, or consumer product, the first design decision is the type of motor. Of course, the two main categories are AC and DC motors.

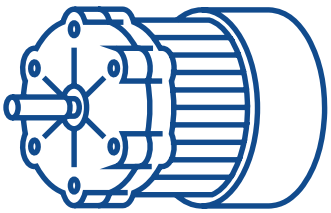

If the power source is DC, you have three basic categories of DC motor from which to choose: brushed, brushless (BLDC), and stepper motors. These create a shaft rotation produced by the interaction of a permanent magnet and an electromagnet. The method of applying and controlling the power to the motor determines the choice for a given application.

Brushed motors and their control – and the way their rotational speed and direction can be controlled electronically – are the subjects of this paper.

Brushed Motor Operation

Brushed DC motors are available in several forms. The smaller motors are sometimes called fractional horsepower motors since their maximum output is usually ¾ horsepower (hp) or less.

One version is made up of a permanent magnet (PM) stator, a wound rotor called an armature, and a commutator. Another more powerful (> ¾ hp) version consists of a wound electrical stator that can create a stronger magnetic field, a wound rotor or armature, and the commutator. The PM motors are usually smaller while the wound-field motors are larger and more powerful. In all cases, the magnetic field produced by the armature interacts with the fixed magnetic field of the stator to produce shaft rotation.

The Fundamentals. As a refresher, here is an introduction to brushed motor operation. ***Fig. 1a*** shows a greatly simplified concept of a PM DC motor. The stator is a permanent magnet with fixed magnetic poles. Centered between the stator poles is the rotor or armature. The armature is an electromagnet that is energized by the external DC power source.

Applying voltage to the armature produces a magnetic field of a specific magnetic orientation. Remember, like magnetic poles repel one another while unlike magnetic poles attract. The armature reacts to the magnetic field of the PM stator and rotation begins. When the rotor gets aligned vertically with the stator, the rotation slows. To maintain rotation, the direction of current flow in the rotor must be periodically changed as it rotates. This keeps the magnetic fields attracting and opposing one another such to maintain rotation.

This process of repeatedly reversing current in the rotor every 180 degrees is solved by connecting the DC voltage to the rotor by way of a rotating switch called a commutator. It does this through slip rings and brushes that contact the commutator (***Fig. 1b***). The switching action repeatedly reverses the magnetic polarity in the rotor and keeps the shaft turning in one direction.

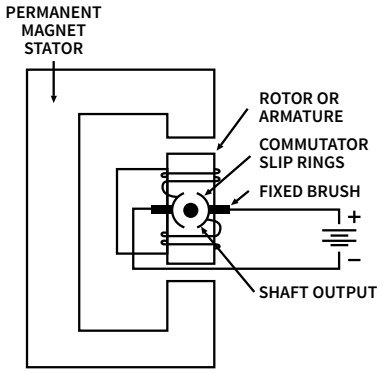

Figure 1 *A simplified illustration of the operation of a brushed DC motor. (a) The commutator slip rings are connected to the rotor coil, and brushes maintain contact with them. (b) The segmented commutator switches rotate with the rotor to reverse the direction of current flow to maintain rotation.*

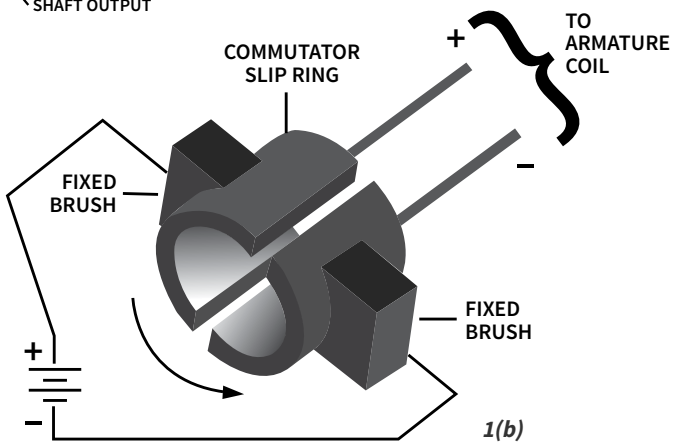

One key difference between smaller fractional horsepower and the larger more powerful motors is the stator.

All brushed motor operation is based on this concept. One key difference between smaller fractional horsepower and the larger more powerful motors is the stator. Large motors have an electromagnetic stator. The stator field is produced by a coil winding on a magnetic core that forms the poles. It is powered by the same DC voltage applied to the armature. Two common connections are shown in ***Fig. 2***.

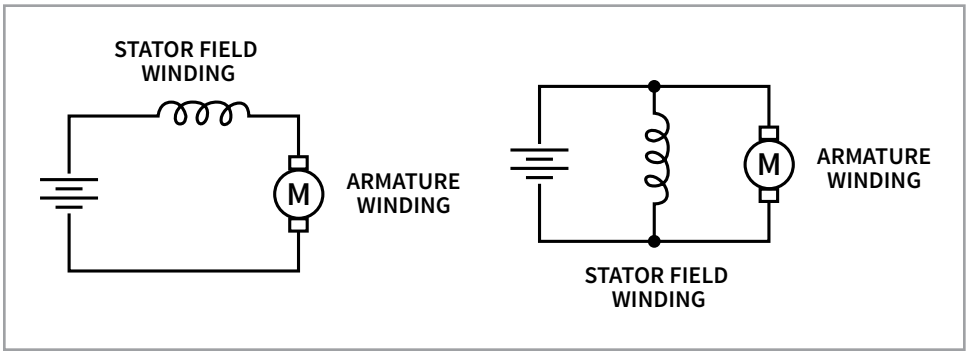

Figure 2 *Larger brushed motors use an electromagnetic field powered by the DC input. Two common arrangements are the series-wound motor (left) and the shunt-wound motor (right).*

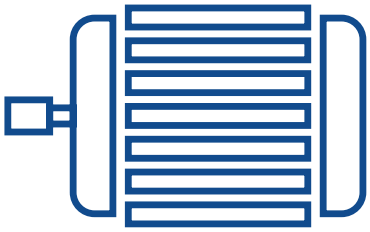

Motor Characteristics. There are two characteristics of the DC motor that are paramount. First, the direction of rotation depends upon the polarity of the applied DC voltage. Reversing the direction of current flow through the rotor reverses the direction of the shaft rotation.

Second, the speed of the motor is proportional to the amount of DC applied to the rotor. The higher the current in the rotor, the stronger the magnetic field and more rapid the rotation. Brushed DC motors are high-speed devices with rotation speeds from several thousand revolutions per minute (rpm) to over 25,000 rpm. And if low speed is a desired trait, a gear motor can be used. Gear motors are brushed DC motors with a set of gears attached to the shaft to reduce the speed to a value required by the application.

The two main control functions to be applied to a DC motor are speed and direction. Electronic circuits readily address these functions.

Directional Control with an H-Bridge

Not all applications require a reversal of shaft rotation. But those that do could use a manual switch to change directions. However, in most cases an electronic solution is preferred.

Changing the direction of rotation of the motor shaft is generally achieved by simply reversing the current direction in the motor coils. One superior method of reversing the current in a motor is to use an H-bridge. This is a bridge circuit made with semiconductor (MOSFET) switches arranged in an H configuration (***Fig. 3***).

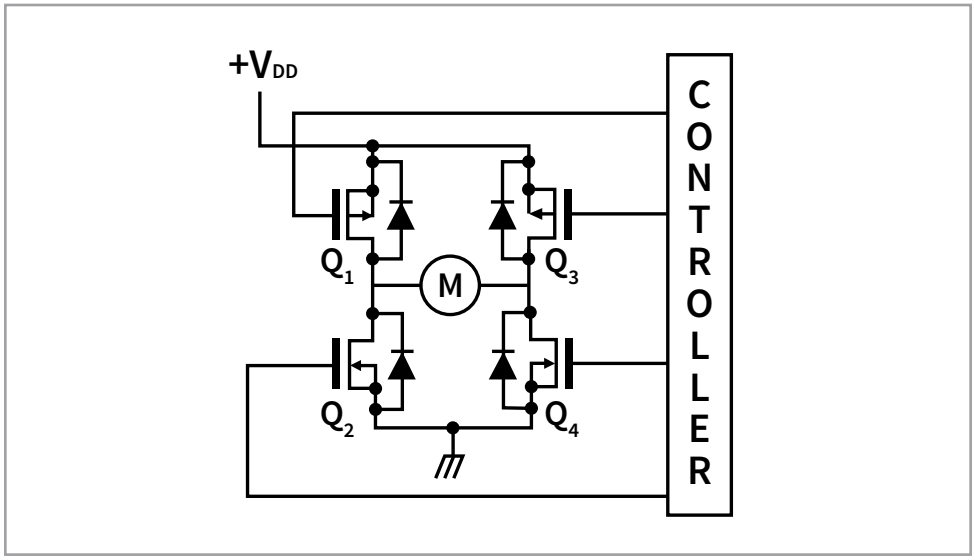

Figure 3 *The H-bridge is an effective solution to controlling the direction of current flow in the load like a brushed motor.*

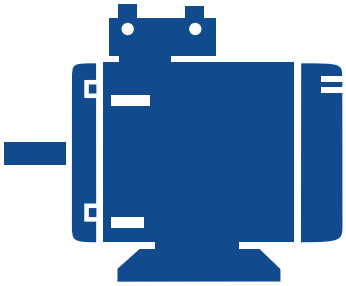

The bridge is made up of MOSFET switches. DC voltage V_{DD} is applied to the bridge as shown. The motor (M) is connected across the bridge. Control logic is used to turn the MOSFETs off or on. If Q_1 and Q_4 are turned on, electron current flow will be through Q_4, then the motor from right to left and through Q_1. Q_2 and Q_3 are off at this time.

To reverse the current flow through the motor, Q_1 and Q_4 are turned off and Q_2 and Q_3 are turned on by the controller. Electron flow is then through Q_2, the motor from left to right and Q_3.

While the H-bridge is mainly used to control motor direction of rotation, it can be used for other functions. Pulse width modulation (PWM) pulses may be applied to the MOSFETs via the controller for speed control.

Speed Variation with PWM

The rotational speed of a brushed motor is proportional to the amount of DC voltage applied. As it turns out, that DC does not have to be continuous. It can just be an average voltage. With that being the case, PWM has become the standard method of controlling the speed of a DC motor.

PWM is a method of generating rectangular pulses at a fixed frequency but providing a way to change the duty cycle of the pulses. The duty cycle (D) is the ratio of the pulse ON time (T_{ON}) to the period of the pulses (T). This fraction is often multiplied by 100 and expressed as a percentage.

$D = T_{ON}/T$

$T = 1/f$

Fig. 4 illustrates the PWM concept. The pulses are applied to the motor, but what the motor sees and reacts to is the average voltage. With narrow pulses, the average is low, so speed is lower. Wider pulses produce a higher average voltage and a faster speed.

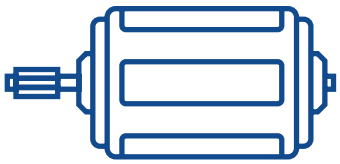

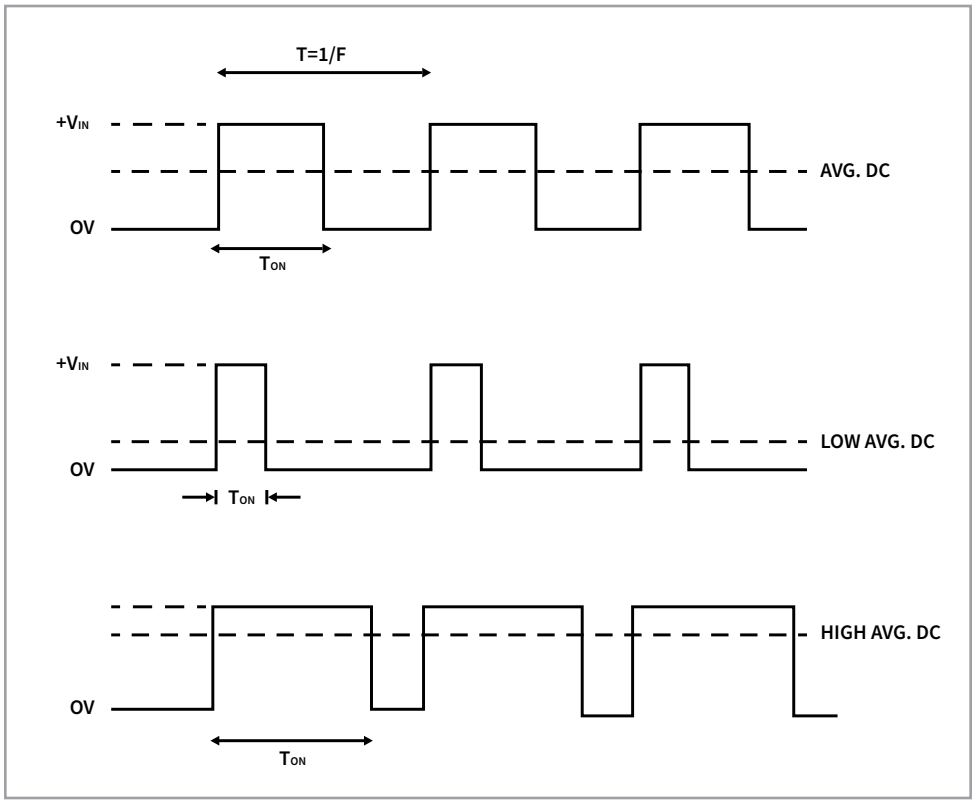

Figure 4 *An example of pulse width modulation (PWM) is when the pulse frequency (f) and period (T) remain constant and the duty cycle is varied to change the average voltage that a motor will receive.*

Assume the input voltage VIN is 12 volts. With a 50% duty cycle, the average voltage seen by the motor is 6 volts.

The source of the PWM signals varies with the application. Many embedded microcontrollers have a PWM output capability. It can be programmed to give the desired speed control. Special PWM controller ICs are also available.

The rotational speed of a brushed motor is proportional to the amount of DC voltage applied. As it turns out, that DC does not have to be continuous.

If both motor speed and directional control are required, the PWM signal can be applied to the H-bridge. With the direction selected, the active transistors can be switched off and on accordingly to control the speed.

An H-Bridge Driver

An available driver IC for brushed motor use is the Toshiba TC78H653FTG, dual H-bridge driver (***Fig. 5***). This MOSFET driver targets low-voltage applications such as battery-operated and mobile devices. Some examples are cameras, printers, electronic locks, smart meters, and toys. The part can also be supported by USB power.

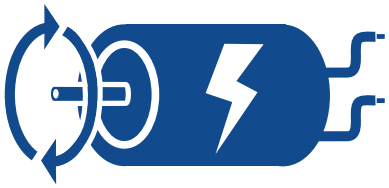

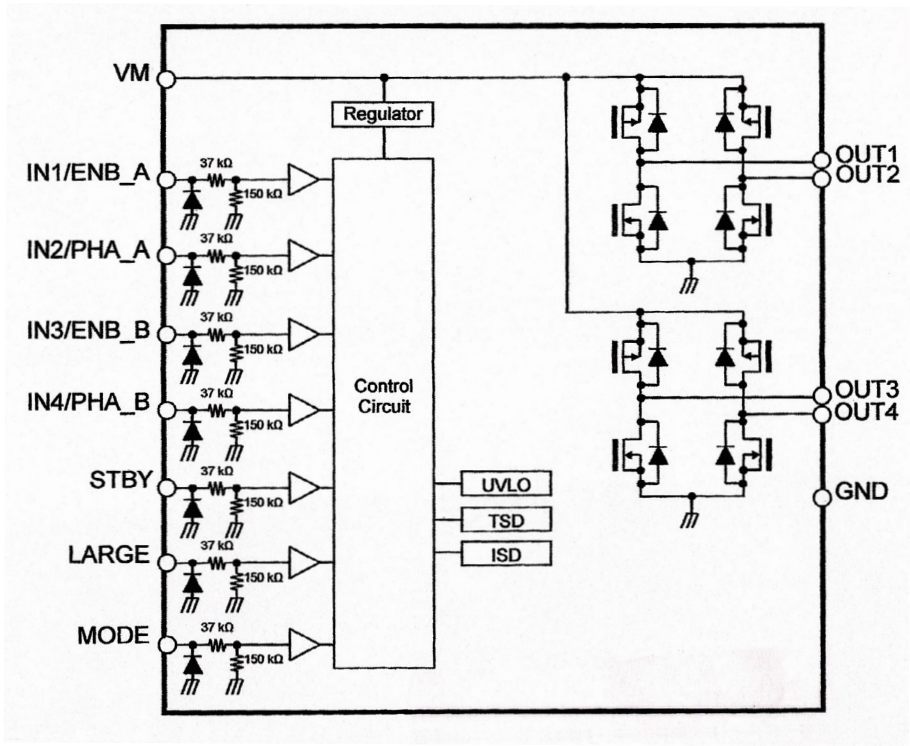

Figure 5 *A general block diagram of Toshiba TC78H653FTG, dual H-bridge IC for motor control.*

Previously adopted drivers used bipolar transistors. This latest chip uses MOSFETs to deliver low voltage (1.8V) and high current (4A). The very low "on" resistance of the MOSFETs improves motor torque since more voltage gets to the motor and greatly minimizes losses and heat dissipation. This chip contains two MOSFET

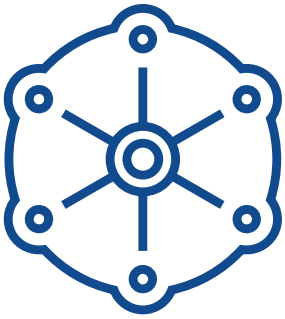

H-Bridge drivers and is capable of driving two brushed motors or a single two-phase stepper motor. Some highlights of this IC include:

- DC operating voltage range: 1.8 to 7.5V
- Output current: 2A per channel
- Output ON resistance: 0.11 ohms (typ.)
- Available protection modes: thermal shutdown (TSD), over-current detection (ISD), and under-voltage lockout (UVLO)
- Selectable modes: Forward, Reverse, Stop, and Brake
- Can be used with brushed DC or stepper motors
- Package: P-VQFN16 (3 mm x 3 mm)

For more details, **download the data sheet and application note**.

Toshiba features about 180 DC motor driver products in its portfolio – of which over 40 are for brushed motors. For more information on its products, visit the **website**.